CONSTRUCTION NOTES:

1. Care must be taken to properly align and square the foundation pier layout because the entire building relies on accurate post placement.
2. Design load: see design loads below.
3. Posts shall be 8"x8" (dressed) for free-standing shed roofs, and 10"x10" (dressed) for shed roofs adjacent to other structures. Posts shall be SYP No. 2 in regions 2 and 3 and Hemlock No. 1 in Region 1. An equivalent species any be used for the posts (min. tabulated bending strength F_b=850 psi).
4. Posts lengths limited to 14 ft (measured from top of pier to bottom of rafter for this standard drawing.)
5. Girders and rafters shall be SYP No. 2 with a minimum bending strength of 975 psi.
6. Knee braces and Y braces shall be SYP No. 2 or better.
7. Posts and lumber shall be pressure treated, conforming to Standard C 16-03 of the American Wood Preservers Association: ACQ - 0.6 lbs per cubic foot for posts; 0.4 lbs per cubic foot for other lumber. Roof rafters are not required to be pressure treated but pressure treated lumber is recommended for durability.
8. Tops of posts shall be notched for connection of the rafters and girders
9. Provide double rafters at all posts. The end of all rafters are to be notched for level bearing on the posts and girders.
10. Solid blocking shall be provided at the center point of each rafter for spans up to 16 feet, and at the third points of each rafter for spans greater than 16 feet. Blocking shall be the same size as the rafter.
11. Use 2"x6" cleats nailed to the girders to fasten the knee braces if needed to keep relatively straight. Use 2"x8" cleats to fasten Y braces as shown on the drawing.
12. No concentrated load shall be hung from the rafters or girders.
13. Purlins shall be 2"x4" spaced 2 ft. on centers (Spruce/Pine/Fir No. 2 or better). Stagger the joints and use 2-16d nails minimum in each purlin at each rafter. Purlins not required if plywood sheathing is required (plywood required for rafter lengths exceeding 18 feet).
14. SIS double coverage roll roofing may be used over 5#8 in. CDX plywood fastened directly to each rafter (no purlins required).
15. USP#RT-7 hurricane clips are to be used on every rafter except rafters connected to the posts. Install 2 clips diagonally per rafter/girder connection (4 clips per rafter).
16. All bolts shall include washers at both ends. Bolt holes may be predrilled up to 1/16" larger than the bolt. Tighten bolts snugly but not enought to crush the wood fibers. Do not recess the bolts or nuts. Bolts shall have a square or hexagonal heads and nuts and meet the requirements. of ASTM A 307. All bolts shall be galvanized in accordance with ASTM A 153. Tighten all bolt connections about six months after construction or when the pressure treated lumber is fully dried.
17. All nail fasteners shall be in accordance with ASTM F1667-05.
18. Zinc coating shall conform to the requirements of ASTM A 153 for Zinc (Hot-Dip Galvanized) Coating for fastener products and ASTM A653, coating designation on G-185 for connector and sheet products.
19. The structure is to be left open (can not be enclosed).
20. Notching at the bottom of column to fit into anchor plates shall not to be permitted.

NOTE:

The drifting and sliding snow loads are added to the flat roof snow load and are applicable to all rafters and girders within 16' of the adjacent structure. Structures within 12 ft of an adjacent structure shall meet the design requirements for an adjacent structure.
The drifting and sliding snow loads are based on the shed roof structure being situated adjacent to another structure that have the following dimensions:

Roof type: Gable
Span: 60'
Length: 60'
Eave Height: 24'

DESIGN LOADS:

DEAD = 15 psf
ROOF LIVE = 20 psf

ASCE 7-05 SNOW LOADS

65 psf Ground Snow Load
P_f =43.7 psf
P_{drift} =77.5 psf
$P_{sliding}$ =34.9 psf

55 psf Ground Snow Load
P_f =37.0 psf
P_{drift} =69.4 psf
$P_{sliding}$ =29.6 psf

35 psf Ground Snow Load
P_f =23.5 psf
P_{drift} =53.1 psf
$P_{sliding}$ =18.8 psf

ASCE 7-05 DESIGN CASES:

3-sec Gust Speed	Ground Snow Load
Region 1. V = 100 mph	$P_g \leq$ 65psf
Region 2. V = 110 mph	$P_g \leq$ 55 psf
Region 3. V = 120 mph	$P_g \leq$ 35 psf

USE OF THE STANDARD DRAWING

- Use of this standard drawing requires strict adherence to all requirements shown on the drawing and in the construction notes.
- The user of this standard drawing must ensure that the site meets the loading assumptions of this design as described in the construction notes, and must properly design the concrete piers based on the soils at the site.
- The posts are not to be attached to the concrete pad or walls of the facility in any way.

ESTIMATED BILL OF MATERIALS

Span=_____feet	
Building Length_____feet	
Highest Elevation of Concrete Floor_____	
Top of Pier Elevation=_____	
Posts: __"x__", ___ feet long	_____no.
Rafters: 2"x__" @ ___" spacing, ___ feet long	_____no.
Girders: 2"x__", 8'-0" long	_____no.
2"x__", 16'-0" long	_____no.
Concrete Piers, ___" diameter	_____cu. yd.
Post Anchor Straps, galvanized (3/8"x3"x24"-2 per post)	_____no.
Knee Braces:2"x6", 6'-0" long (2 per post)	_____no.
Girder/Post (Y) Braces:2"x6", 6'-0" long (2 per post)	_____no.
Rafter Blocking: 2"x___"	_____no.
Fascia Board: 2"x___"	_____lin. ft.
Plywood Sheathing, 5/8" CDX, if required	_____sq. ft.
Purlins, 2"x4"	_____lin. ft.
Roofing Material:_____	_____sq. ft.
Hurricane Ties: USP #RT-7	_____no.
5/8" dia. bolts, ___" long (knee braces to post connections, 3 per post)	_____no.
3/4" dia. bolts, ___" long (rafter to post connections, 2 per post)	_____no.
5/8" dia. bolts, ___" long (Y braces to post connections, 4 per post)	_____no.
1/2" dia. bolts, ___" long (girders to post connections, 4 per post)	_____no.
5/8" dia. bolts, ___" long (post to pier connections, 2 per post)	_____no.
Cleats	As needed
Nails (10d, 16d, 30d)	As needed

NOTE: All wood to be pressure treated Southern Yellow Pine (SYP), No. 2, except posts in Region 1 which are to be pressure treated Hemlock No. 1. See construction notes for additional requirements.

DESIGN REGIONS

*** Region 1 – V=100 MPH, Pg=65 psf**

Free Standing (8"x8" posts)			Adjacent to Existing Structure (10"x10" posts)	
Rafter Length	Rafters	Girders	Rafters	Girders
8 ft.	2x8 @ 16"	2x8	2x10 @ 12"	2x10
10 ft.	2x10 @ 16"	2x10	2x12 @ 12"	2x10
12 ft.	2x10 @ 16"	2x10	2x12 @ 12"	2x10
14 ft.	2x12 @ 12"	2x10	2 - 2x10 @ 12"	2x12
16 ft.	2x12 @ 12"	2x10	2 - 2x12 @ 12"	2x12
18 ft.	2 - 2x10 @ 12"	2x10	2- 2x12 @ 12"	2x12
20 ft.	2 - 2x10 @ 12"	2x12	2- 2x14 @ 12"	2x12

*** Region 2 – V=110 MPH, Pg=55 psf**

Free Standing (8"x8" posts)			Adjacent to Existing Structure (10"x10" posts)	
Rafter Length	Rafters	Girders	Rafters	Girders
8 ft.	2x8 @ 16"	2x8	2x10 @ 12"	2x10
10 ft.	2x10 @ 16"	2x10	2x10 @ 12"	2x10
12 ft.	2x10 @ 16"	2x10	2x12 @ 12"	2x10
14 ft.	2x10 @ 12"	2x10	2 - 2x10 @ 12"	2x12
16 ft.	2x12 @ 12"	2x10	2 - 2x10 @ 12"	2x12
18 ft.	2 - 2x10 @ 12"	2x10	2 - 2x12 @ 12"	2x12
20 ft.	2 - 2x10 @ 12"	2x12	2 - 2x14 @ 12"	2x12

*** Region 3 – V=120 MPH, Pg=35 psf**

Free Standing (8"x8" posts)			Adjacent to Existing Structure (10"x10" posts)	
Rafter Length	Rafters	Girders	Rafters	Girders
8 ft.	2x8 @ 16"	2x8	2x10 @ 12"	2x10
10 ft.	2x10 @ 16"	2x10	2x10 @ 12"	2x10
12 ft.	2x10 @ 16"	2x10	2x10 @ 12"	2x10
14 ft.	2x10 @ 12"	2x10	2x12 @ 12"	2x12
16 ft.	2x12 @ 12"	2x10	2 - 2x10 @ 12"	2x12
18 ft.	2 - 2x10 @ 12"	2x10	2 - 2x12 @ 12"	2x12
20 ft.	2 - 2x10 @ 12"	2x12	2 - 2x12 @ 12"	2x12

* Table 1604.11 in the Massachusetts Amendments to the IBC 2009 specifies the ground snow load and basic wind speed for each City/Town in the State of Massachusetts. A City/Town shall not exceed the specified basic wind speed and ground snow load to qualify for the NRCS Standard Design drawings for that region.

REVISIONS		
DATE	APPROVED	TITLE

		Date
Designed	APM	05-25-12
Drawn	DQH	05-25-12
Checked	DEP	05-25-12
Approved	...	...

SHED ROOF STANDARD DRAWING (POSTS AT TOP OF PIERS)
ROOF CONSTRUCTION NOTES

Massachusetts

NRCS
Natural Resources Conservation Service
United States Department of Agriculture

Drawing Name
Shed Roof-Piers.dwg

Layout Name
Notes

12/21/11

Sheet 1 of 2

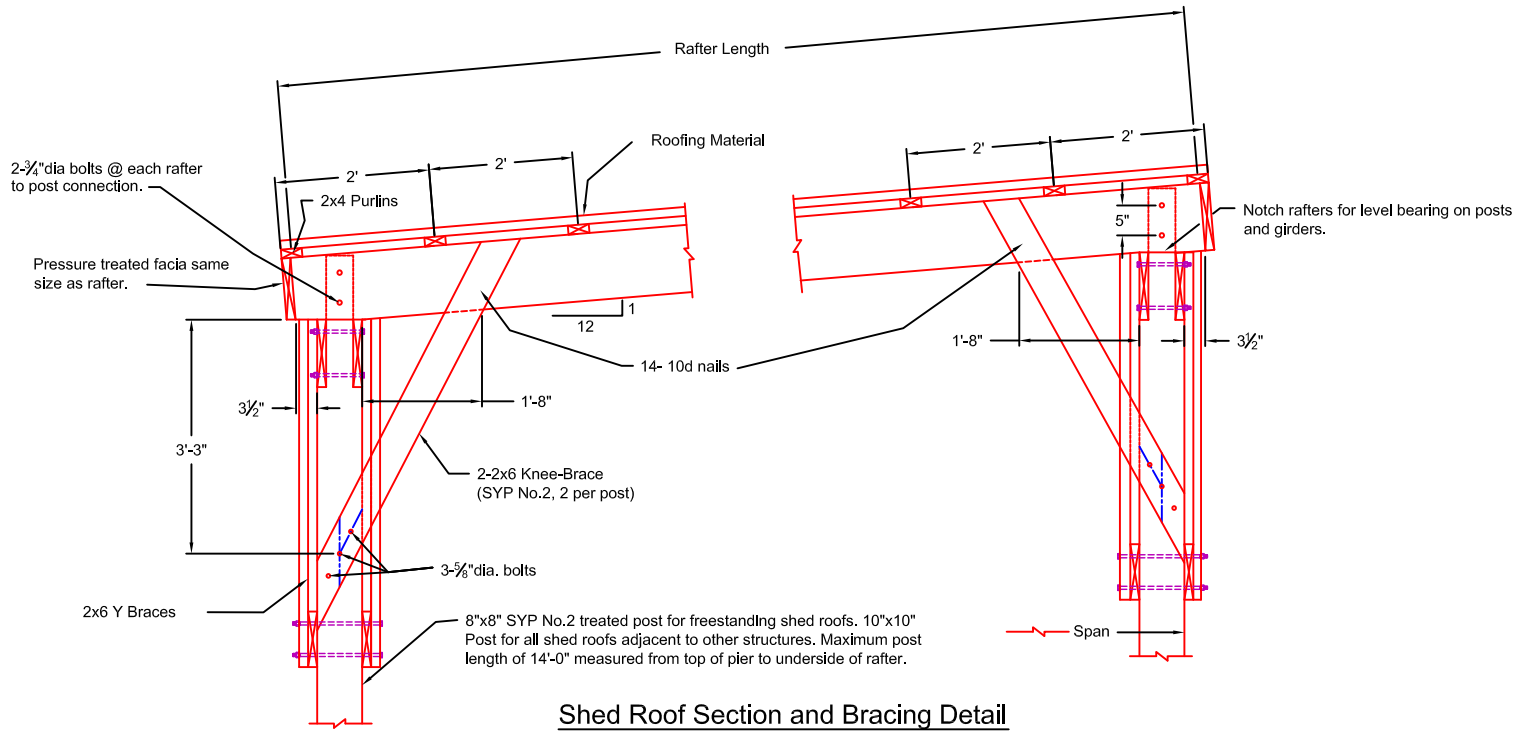

Shed Roof Section and Bracing Detail

Scale: ¾" = 1'-0"

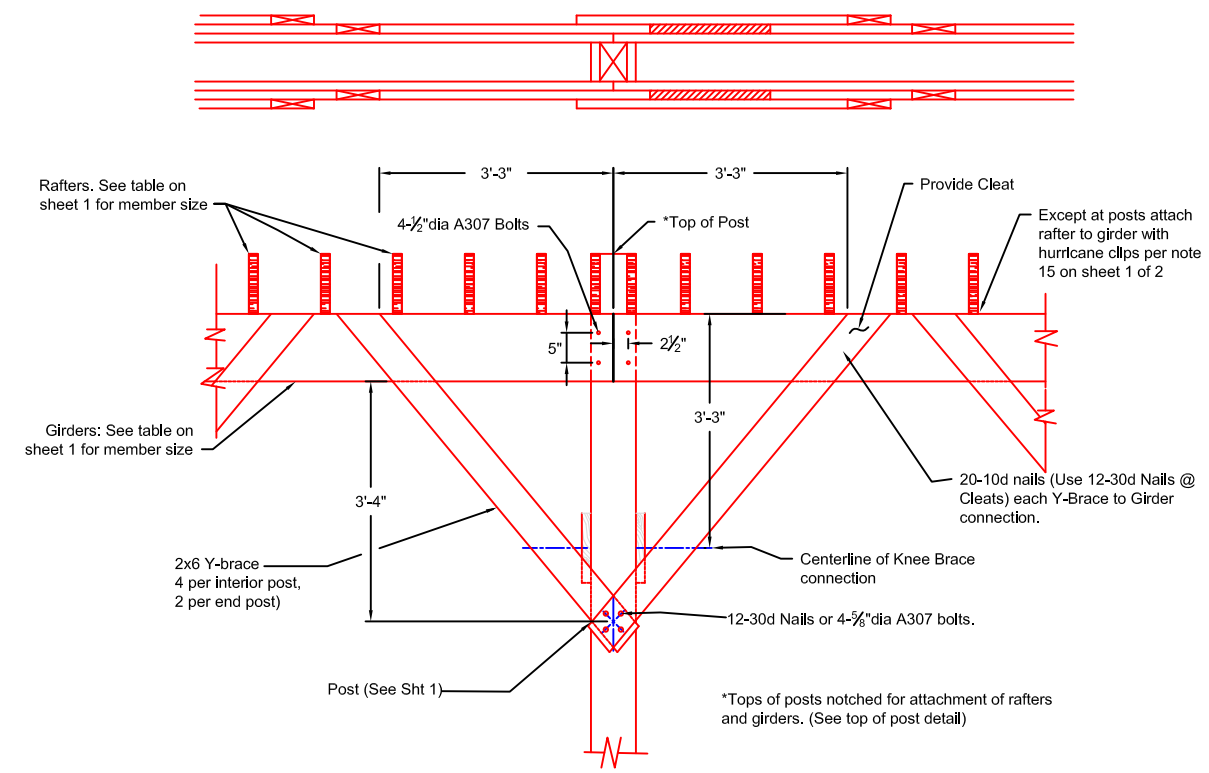

Y-Brace to Post and Girders Detail

Scale: ¾" = 1'-0"

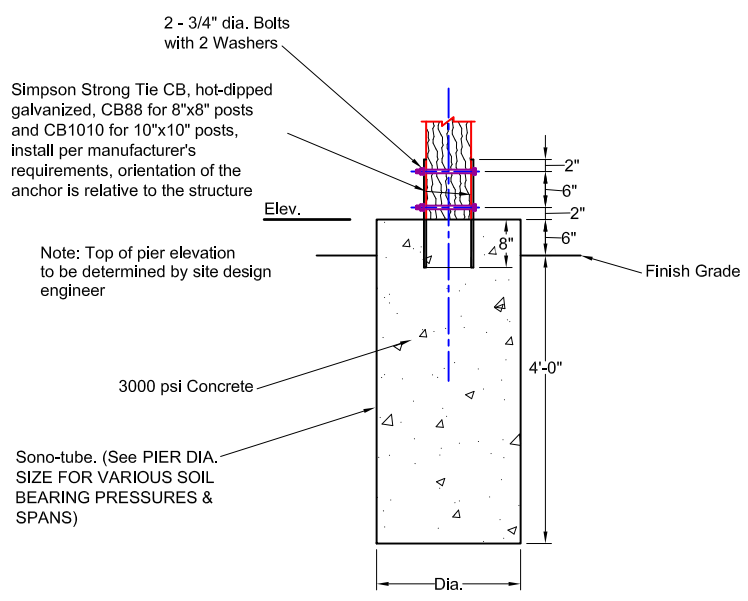

Pier Foundation Detail

Scale: 3/4" = 1'-0"

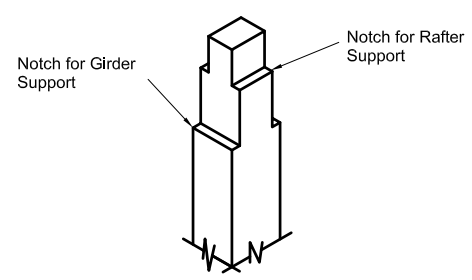

Top of Post Detail

Scale: 3/4" = 1'-0"

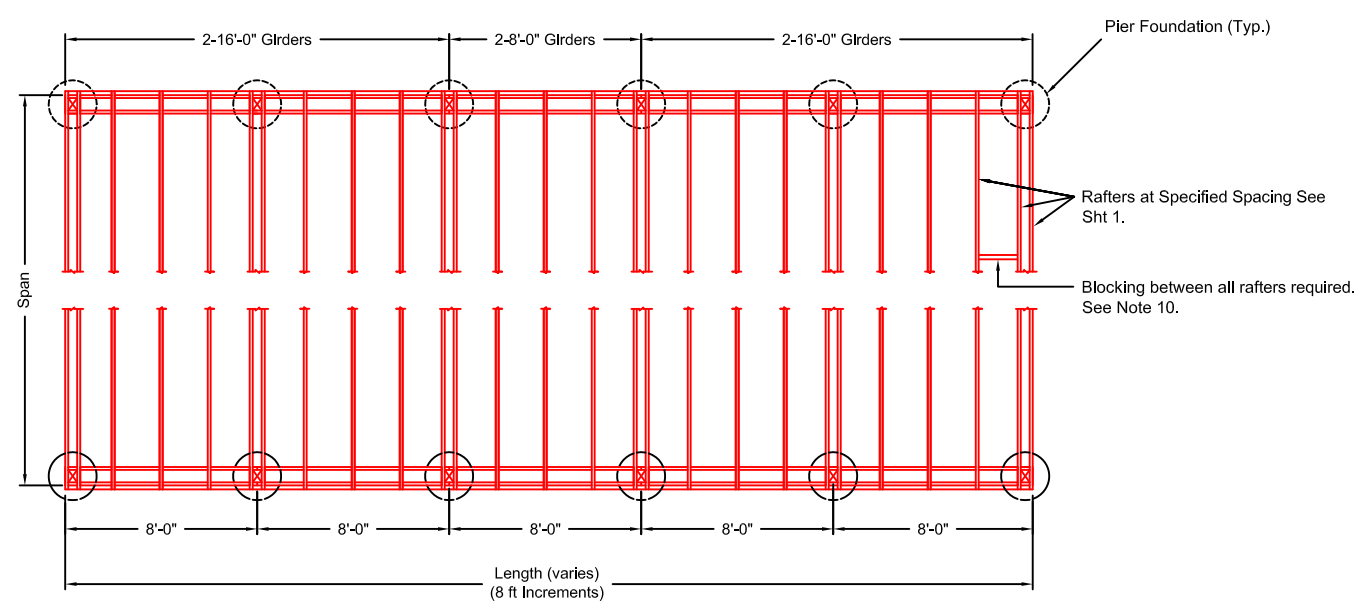

Typical Structure Plan Layout

Scale: 1/4" = 1'-0"

PIER DIA. SIZE FOR VARIOUS SOIL BEARING PRESSURES & SPANS					
USCS Soil Class	Allowable Bearing (ksf)	Max. Span (ft)			
		18"Ø	24"Ø	30"Ø	36Ø
ML, MH, CL,SM, SC, GM,	2		14	16	20
GC,SW, SP,	3		16	20	
GW, GP	5	12	20		
Bedrock	6	18	20		

REVISIONS		
DATE	APPROVED	TITLE

		Date
Designed	APM	05-25-12
Drawn	DQH	05-25-12
Checked	DEP	05-25-12
Approved		

SHED ROOF STANDARD DRAWING (POSTS AT TOP OF PIERS)

SHED ROOF DETAILS

Massachusetts

NRCS
Natural Resources Conservation Service
United States Department of Agriculture

Drawing Name
Shed Roof-Piers.dwg

Layout Name
Details

12/21/11

Sheet 2 of 2