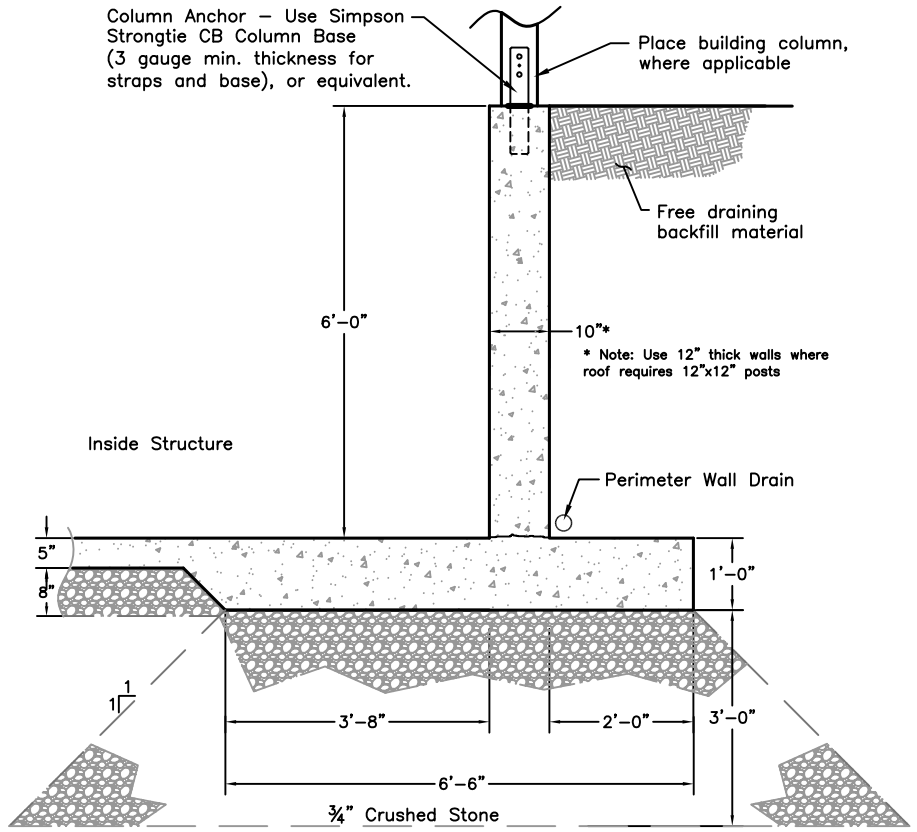

SCALE 3/8" = 1'

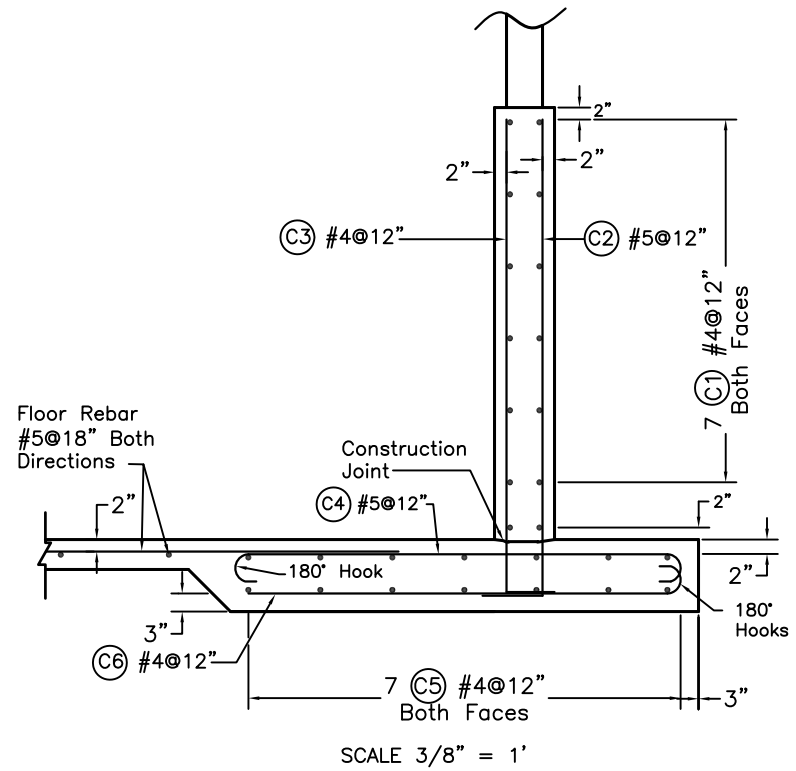

SCALE 3/8" = 1'

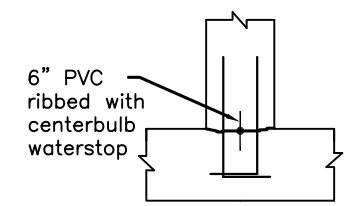

CONSTRUCTION JOINT DETAIL

NOT TO SCALE

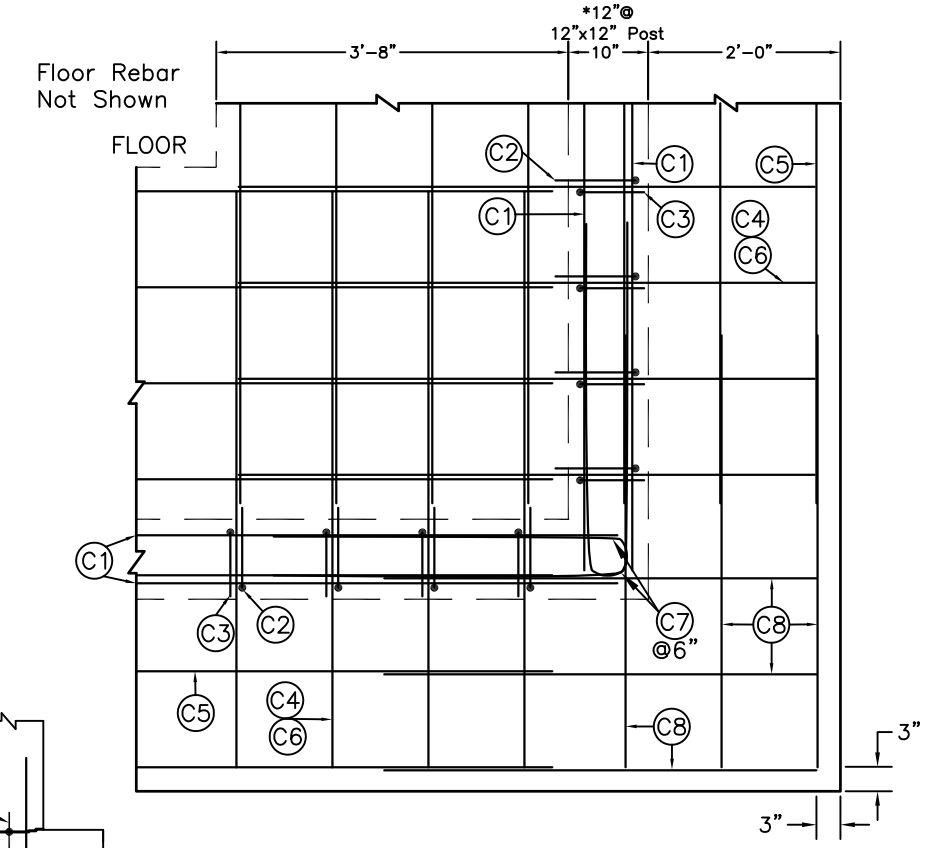

CORNER DETAIL (PLAN VIEW)

SCALE 1/2" = 1'

NOTE: All bars spaced 12" on center except where noted.

C7 – 22 bars per corner

C8 – 12 bars per corner

CRUSHED STONE SPECIFICATION

Crushed stone shall consist of durable crushed rock or durable crushed gravel stone, free from ice and snow, sand, clay, loam, or other deleterious or organic material. Crushed stone shall be used as bedding below slabs–on–grade and foundation wall footings with thickness as indicated on the drawings. Crushed stone shall be wrapped in non–woven filter fabric 6–oz/sy, placed in maximum 6–inch thick layers, loose measure, and compacted with a minimum of four (4) passes of a vibratory plate or roller compactor. The crushed stone shall be uniformly blended and shall conform to the following requirements:

Sieve Size	Percent Passing by Weight
1–inch	100
¾–inch	90–100
⅝–inch	---
½–inch	10–50
⅜–inch	0–20
No. 4	0–5
No. 8	---

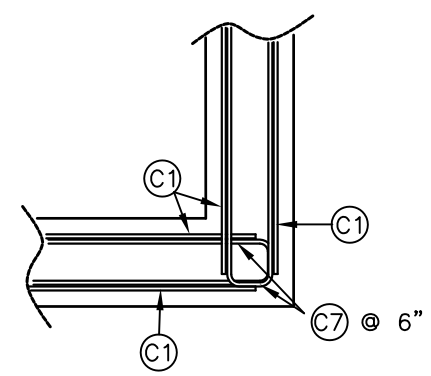

WALL CORNER DETAIL

NOT TO SCALE

STEEL SCHEDULE

MARK	SIZE	QUANTITY	TYPE	A	B	LENGTH	TOTAL LENGTH
C1	4		Straight	–	–		
C2	5		21	6'–7"	10"	7'–5"	
C3	4		21	6'–7"	10"	7'–5"	
C4	5		180° HOOK EA. END	–	–	7'–2"	
C5	4		Straight	–	–		
C6	4		180° HOOK ONE END	–	–	6'–7"	
C7	4		22	3'–7"	4⅞"*	7'–6⅞"*	
C8	4		Straight	–	–	4'–6"	

* 6 7/8" @ 12" WALL

** 7'–8 7/8" @ 12" WALL

#4 BARS, TOTAL LENGTH = _____ X 0.668 LBS/FT. = _____LBS

#5 BARS, TOTAL LENGTH = _____ X 1.043 LBS/FT. = _____LBS

TOTAL REBAR = _____ LBS

CONCRETE = 0.426 CY/FT. OF WALL LENGTH ESTIMATED TOTAL = ____CY

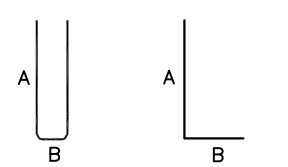

TYPE 22 BAR TYPE 21 BAR

MINIMUM LAP SPLICE

#4 bars = 1'–8"

#5 bars = 2'–1"

NOTE: QUANTITIES OF STEEL SHOWN DO NOT INCLUDE LAP SPLICE OR DEVELOPMENT LENGTHS.

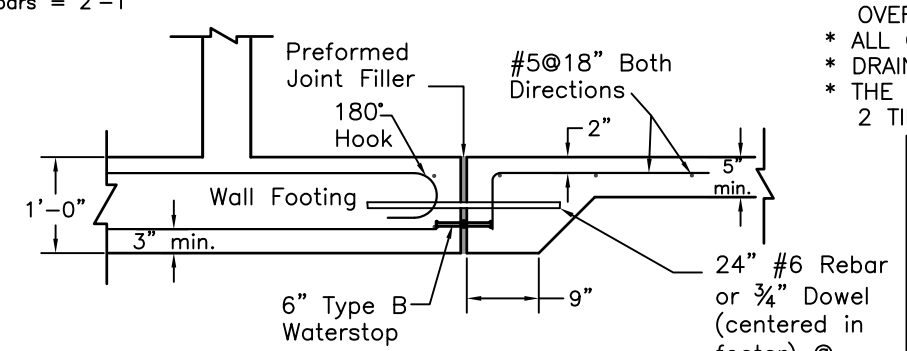

OPTIONAL FLOOR DETAIL

(minimum wall backfill of 4'–6" required)

NOT TO SCALE

WALL DESIGN LOADING

* MANURE LOADING = 65 pcf
* BACKFILL: GRANULAR, NON–COHESIVE
* DENSITY = 120 pcf; ø = 30°
* SURCHARGE = 2' OF BACKFILL EQUIVALENT (120 psf EFP REPRESENTING MACHINERY LOAD ON SOIL)

CONSTRUCTION

* CONTRACTION JOINTS SHALL BE PLACED IN WALLS AT A MAXIMUM SPACING OF 30'.
* EXPANSION JOINTS IN THE FLOOR SLABS SHALL BE A MAXIMUM OF 25', THE SUBBASE MATERIAL UNDER THE SLAB SHALL BE 3/4" CRUSHED STONE AS INDICATED ON THE DRAWINGS. SEE PROJECT DRAWINGS AND SPECS FOR ADDITIONAL SUBBASE REQUIREMENTS.
* UNLESS OTHERWISE SHOWN, PROVIDE A MINIMUM OF 2" OF CONCRETE COVER OVER ALL STEEL.
* ALL CONTRACTION AND EXPANSION JOINTS SHALL HAVE WATERSTOPS.
* DRAINAGE SHALL BE DIRECTED AWAY FROM THE WALL.
* THE TOP WIDTH OF THE BACKFILL AROUND THE WALL SHALL BE AT LEAST 2 TIMES THE BACKFILL HEIGHT.

CONDITIONS OF USE

* STANDARD DRAWING – DESIGNER MUST ENSURE THE APPLICATION OF THIS DRAWING MEETS THE ASSUMPTIONS OF THE DESIGN AS STATED.
* MAXIMUM ROOF SPAN OF 50'; MAXIMUM EAVE HEIGHT (TOP OF FOOTER TO BOTTOM OF TRUSS) OF 14'; AND MAXIMUM COLUMN SPACING OF 8'.
* BACKFILL HEIGHT = 0' TO 6' (4' RECOMMENDED FOR FROST).
* FOOTING MUST BE RESTRAINED WITH A FLOOR SLAB.
* DRAINAGE CONDITION: FULL DRAINAGE, EITHER BY COARSE WELL DRAINED BACKFILL OR A DRAINAGE SYSTEM.
* MINIMUM SUBGRADE BEARING CAPACITY = 2,000 psf
* CONCRETE STRENGTH = 4,000 psi REBAR = GRADE 60

WASTE STORAGE FACILITY

6' HIGH WALL WITH COLUMNS

0' TO 6' BACKFILL

STANDARD DWG. NO. MA–WSF–11RF

DATE May 2012 | SHEET 1 OF 1

		Date
Designed	APM	05-25-12
Drawn	DOH	05-25-12
Checked	DEP	05-25-12
Approved		

STANDARD DRAWING

6' TEE WALL WITH COLUMNS

WASTE STORAGE FACILITY

NRCS

Natural Resources Conservation Service

United States Department of Agriculture

Project Name

Drawing Name

MA–WSF–11

Sheet of