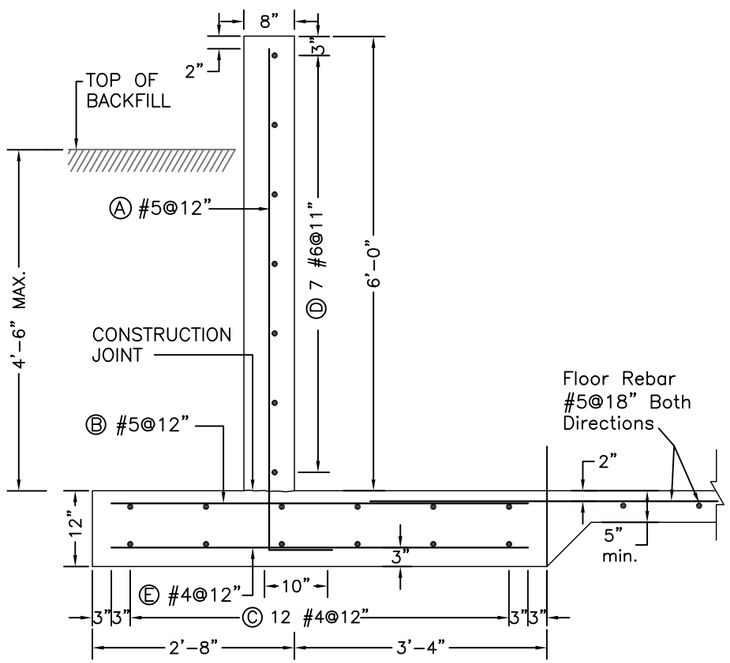

SECTION

SCALE 1/2" = 1'-0"

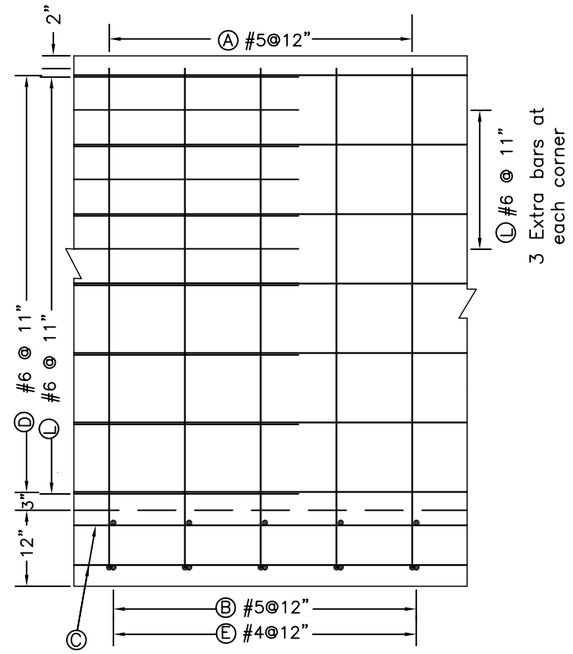

CORNER ELEVATION

SCALE 1/2" = 1'-0"

STEEL SCHEDULE

MARK	SIZE	QUANTITY	TYPE	a	b	c	LENGTH	TOTAL LENGTH
A	5		21	6'-7"	0'-10"	–	7'-5"	
B	5		Straight	–	–	–	5'-6"	
C	4		Straight	–	–	–		
D	6		Straight	–	–	–		
E	4		Straight	–	–	–	5'-6"	
K	4		22	1'-5"	0'-2¼"	0'-4"	2'-5½"	
L	6		21	4'-0"	4'-0"	–	8'-0"	
M	4		Straight	–	–	–	4'-4"	

#4 BARS, TOTAL LENGTH = _____ X 0.668 LBS/FT. = _____LBS
#5 BARS, TOTAL LENGTH = _____ X 1.043 LBS/FT. = _____LBS
#6 BARS, TOTAL LENGTH = _____ X 1.502 LBS/FT. = _____LBS

TOTAL REBAR = _____ LBS

CONCRETE = 0.37 CY/FT. OF WALL LENGTH ESTIMATED TOTAL = ____CY

MINIMUM LAP SPLICE
#4 bars = 1'-8"
#5 bars = 2'-1"
#6 bars = 2'-6"

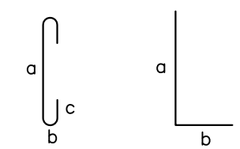

TYPE 22 BAR TYPE 21 BAR

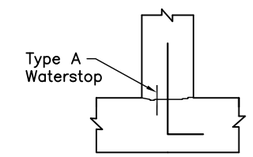

CONSTRUCTION JOINT DETAIL

NOT TO SCALE

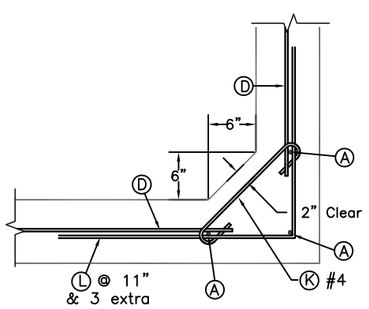

WALL CORNER FILLET DETAIL

NOT TO SCALE

Ⓚ – 10 bars per corner
Ⓛ – 10 bars per corner
Ⓜ – 12 bars per corner
Ⓐ – 1 extra bar per corner

NOTE: All bars spaced 12" on center except where noted.

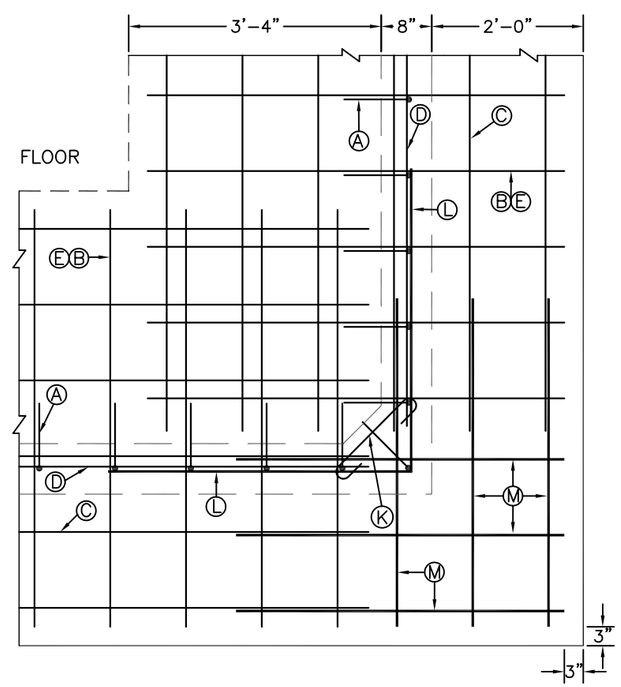

CORNER DETAIL (PLAN VIEW)

SCALE 1/2" = 1'

WALL DESIGN LOADING

* MANURE LOADING = 65 pcf
* BACKFILL: GRANULAR, NON-COHESIVE
* DENSITY = 120 pcf; ø = 30°
* SURCHARGE = 2' OF BACKFILL
  (120 psf EFP REPRESENTING MACHINERY LOAD ON SOIL)

CONSTRUCTION

* CONTRACTION JOINTS SHALL BE PLACED IN WALLS AT A MAXIMUM SPACING OF 150'.
* EXPANSION JOINTS IN THE FLOOR SLABS SHALL BE A MAXIMUM OF 80', THE SUBBASE MATERIAL UNDER THE SLAB SHALL BE SAND, OR AT LEAST 2" OF SAND OVER CRUSHED STONE OR GRAVEL. SEE PROJECT DRAWINGS AND SPECS FOR ADDITIONAL SUBBASE REQUIREMENTS.
* UNLESS OTHERWISE SHOWN, PROVIDE A MINIMUM OF 2" OF CONCRETE COVER OVER ALL STEEL.
* ALL CONTRACTION AND EXPANSION JOINTS SHALL HAVE TYPE B WATERSTOPS.
* DRAINAGE SHALL BE DIRECTED AWAY FROM THE WALL.
* THE TOP WIDTH OF THE BACKFILL AROUND THE WALL SHALL BE AT LEAST 2 TIMES THE BACKFILL HEIGHT.

CONDITIONS OF USE

* STANDARD DRAWING – DESIGNER MUST ENSURE THE APPLICATION OF THIS DRAWING MEETS THE ASSUMPTIONS OF THE DESIGN AS STATED.
* BACKFILL HEIGHT– 0' to 4' – 6".
* FOOTING MUST BE RESTRAINED WITH A FLOOR SLAB.
* DRAINAGE CONDITION: FULL DRAINAGE, EITHER BY COARSE WELL DRAINED BACKFILL OR A DRAINAGE SYSTEM.
* MINIMUM SUBGRADE BEARING CAPACITY = 2,000 psf
* CONCRETE STRENGTH = 4,000 psi REBAR = GRADE 60

WASTE STORAGE FACILITY	
6' HIGH "TEE" WALL PARTIAL BACKFILL (0' TO 4'-6")	
STANDARD DWG. NO. MA-WSF-03	
DATE Sept. 2009	SHEET 1 OF 1

Date
Designed
Drawn
Checked
Approved

STANDARD DRAWING
6' HIGH "TEE" WALL
PARTIAL BACKFILL (0' TO 4'-6")
WASTE STORAGE FACILITY

NRCS
Natural Resources Conservation Service
United States Department of Agriculture

Project Name

Drawing Name
MA-WSF-03

Sheet of